Rainwater Harvesting

GRAF

Installation and maintenance instructions

Indirect (Header Tank) Rainwater Harvesting System

1. GENERAL NOTES

The points described in these instructions must be followed correctly. If not correctly observed, any right to claim on the warranty may be refused.
Any missing instructions must be requested directly from us.
A complete check of all the items/components for possible damage must be carried out before the assembly or installation begins.
The installation must be carried out in a professional manner.

Safety

The relevant accident prevention regulations must be observed during all work.

The relevant regulations and standards must additionally be taken into consideration during installation, assembly, servicing, repair, etc.

The system or individual parts of the system must be installed by qualified specialists.

During all work on the system or parts of the system, the entire system must always be rendered inoperable and secured to prevent unauthorised reactivation.

Except in the event of work carried out in the tank, the cover of the tank must always be kept sealed, as this otherwise constitutes a maximum risk of accident. Only original GRAF covers or covers approved in writing by
GRAF must be used.

GRAF offers an extensive range of accessories, all of which are designed to match each other and which can be extended to form complete systems. The use of accessories that have not been approved by GRAF results in the exclusion of the warranty/guarantee.

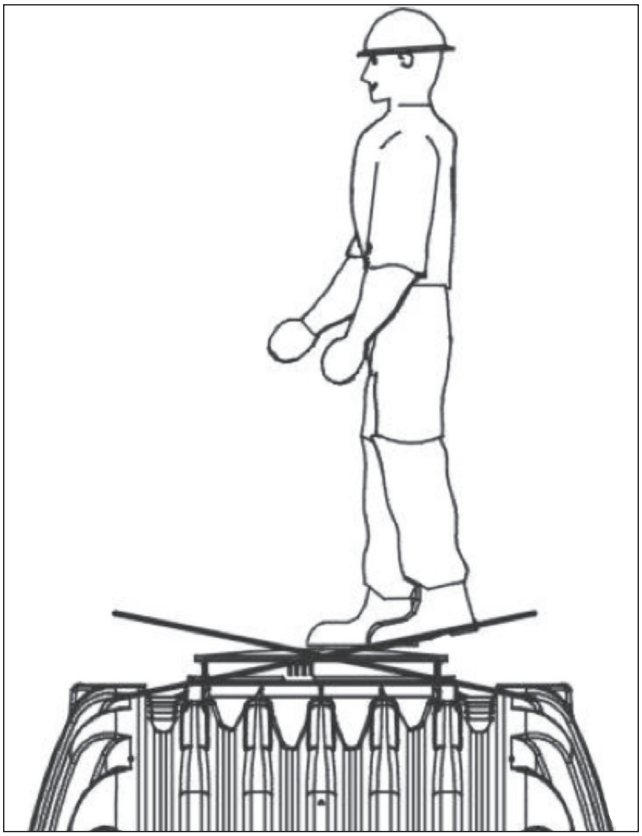

Identification obligation - Regulation

The water in these systems is not suitable for consumption or personal hygiene.

All pipe work and outlets of the water systems are to be labelled with the words “Not drinking water” either in words or graphically. (British Standard BS EN 16941-1:2024) so that after years of use, an accidental connection to the drinking water system is prevented. Even when correctly labelled it may possibly be mistaken, for example by children. For this reason, all the outlets of the systems process water must be fitted with child safe valves.

Suitability

Please note water is gravity fed from the header tank to the appliance/s.
Please check pressure and flow requirements of appliances to confirm suitability of the system.

2. TECHNICAL DATA

Schematic drawing of GRAF Indirect (Header Tank) System - Carat Tank

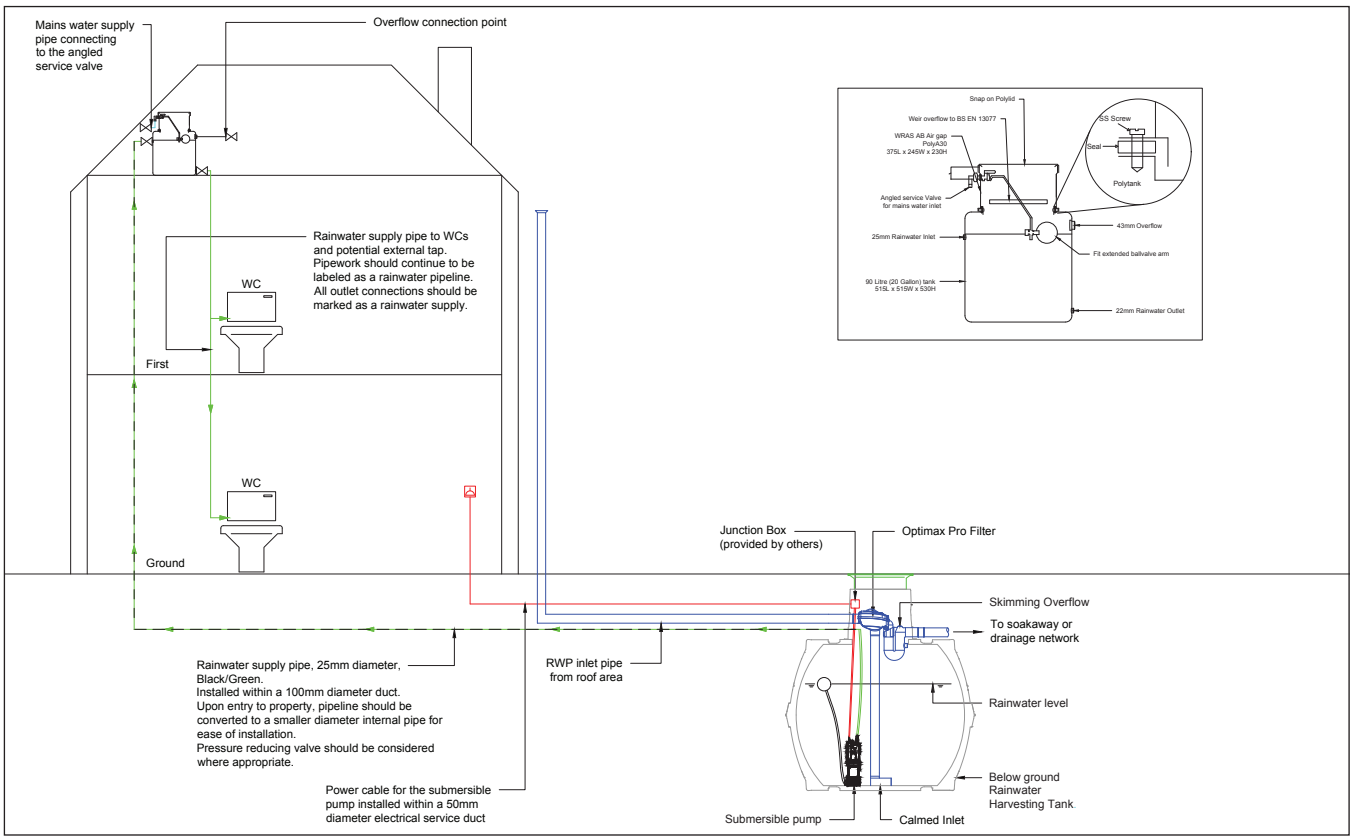

Schematic drawing of GRAF Indirect (Header Tank) System - Platin Tank

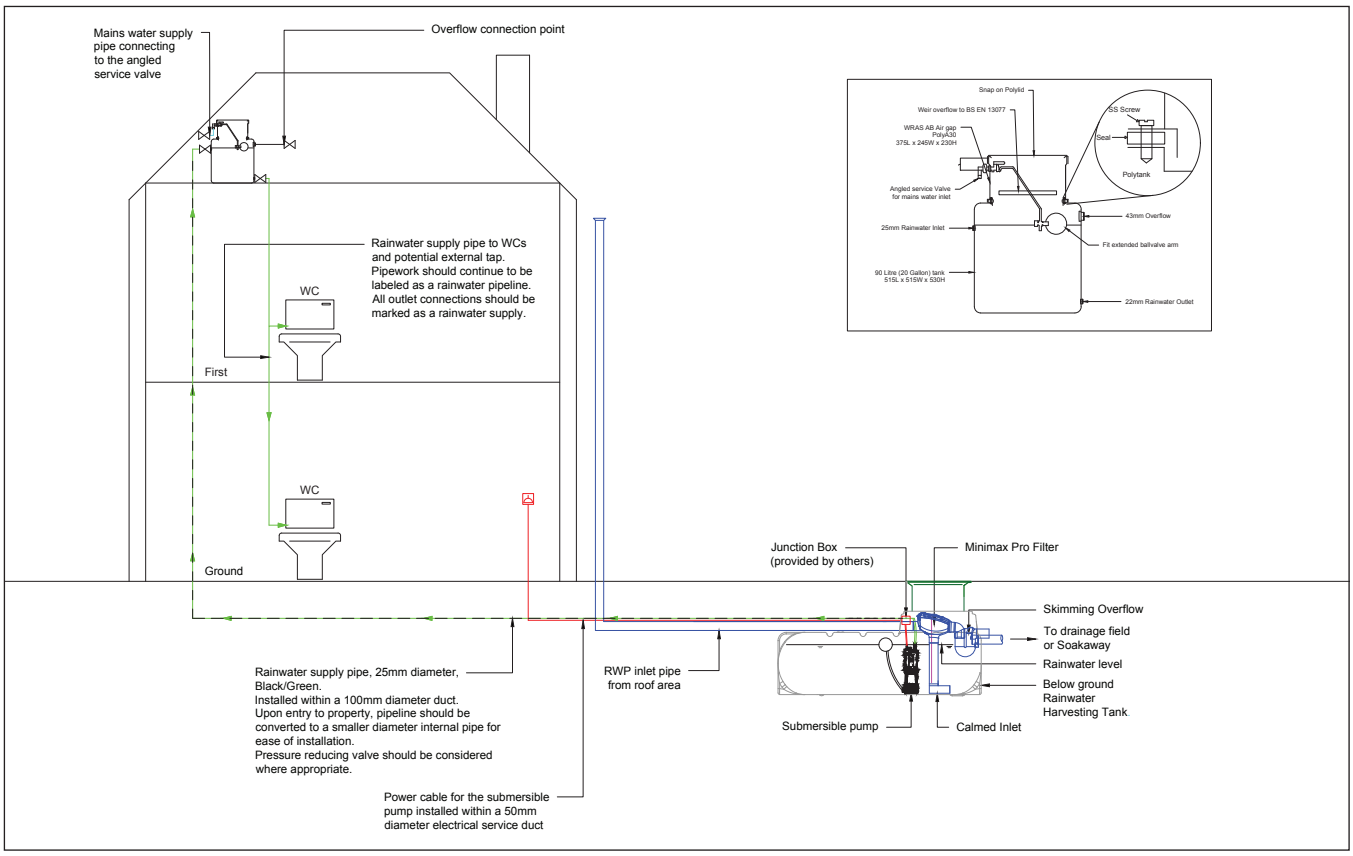

3. PLATIN HOUSE INDIRECT PACKAGE

The simple garden solution with submersible pump system

3.1 Scope of supply

1. Platin underground tank (choice of tanks available, sizes vary according to property type)
2. Telescopic lid (choice of telescopic lid available, depending on tank location)
3. Minimax Pro filter supplied in accordance with type of tank
4. Submersible pump with floating water intake
5. Float switch (connected from mains water backup unit to the underground tank)
6. Header tank package

3.2 Supplied by others

7. 100mm diameter duct pipe to contain; float sensor cable, power cable for pump
8. 100mm diameter drainage pipe connected from downpipes to the inlet at the top of the tank (all downpipes brought into one pipe for connection to the filter)
9. 100mm diameter pipe for overflow from the tank to mains drainage network or soakaway

3. CARAT HOUSE INDIRECT PACKAGE

The home solution with submersible pump and loft tank system

3.1 Scope of supply

1. Carat underground tank (choice of tanks available, sizes vary according to property type)
2. Telescopic lid (choice of telescopic lid available, depending on tank location)
3. Optimax Pro filter supplied in accordance with type of tank
4. Submersible pump with floating water intake
5. Float switch (connected from mains water backup unit to the underground tank)
6. Header tank package

3.2 Supplied by others

7. 100mm diameter duct pipe to contain; float sensor cable, power cable for pump
8. 100mm diameter drainage pipe connected from downpipes to the inlet at the top of the tank (all downpipes brought into one pipe for connection to the filter)
9. 100mm diameter pipe for overflow from the tank to mains drainage network or soakaway

4. HEADER TANK - INSTALLATION OF TECHNICAL PARTS

4.1 Scope of supply main components

The GRAF Indirect header tank consists of a 90 litre (20 gallon) water storage tank and a WRAS AB air gap tank with a weir overflow for category 5 protection.

90 litre (20 gallon) tank

WRAS AB air gap tank with weir overflow

Complete header tank system

OVERFLOW – connect the 43mm fitting to the pre-drilled overflow connection.

RAINWATER OUTLET – connect 22mm fitting with isolation valve to the pre-drilled rainwater outlet connection point.

RAINWATER INLET – attach rainwater filling valve with isolation valve to the pre-drilled rainwater inlet connection.

4. HEADER TANK - INSTALLATION OF TECHNICAL PARTS

4.1 Scope of supply main components
Continued

MAINS WATER INLET – connect the ball valve and back plate to the pre-drilled mains water inlet connection (NOTE:- ALWAYS FIT THE BACK PLATE) and attach the service valve connection.

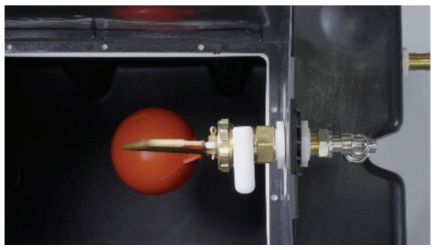

Fix the mains water inlet WRAS tank to the 90 litre header tank using the fittings provided.

Wrap both the WRAS AB air gap tank and the 90 litre header tank in the insulation jackets provided.

4. INDIRECT (HEADER TANK) RAINWATER HARVESTING SYSTEM INSTALLATION OF TECHNICAL PARTS

4.5 Submersible pump

Electrical data and dimensions

Note: Standard scope of supply is Divertron X 900

MODEL	ELECTRICAL DATA							DIMENSIONS										PACKING VOLUME dm³	Q.TY X PALLET	WEIGHT Kg
	POWER INPUT 50 Hz	P1 W	P2 NOMINAL		In A	CAPACITOR		A	B	C	H	H1	H2	H3	PACKING DIMENSIONS					
			kW	HP		µF	V								L/A	L/B	H			
DIVERTRON 900	1 x 220-240 V ~	920	0,56	0,75	4,2	12,5	450	Ø 160	-	-	536	517	503	596	550	195	250	28,6	32	11
DIVERTRON 650	1 x 220-240 V ~	630	0,42	0,56	2,9	8	450	Ø 160	-	-	488	469	455	548	550	195	250	28,6	32	9,5
DIVERTRON X 900	1 x 220-240 V ~	920	0,56	0,75	4,2	12,5	450	Ø 160	186	33	536	517	503	596	550	195	250	28,6	32	11
DIVERTRON X 650	1 x 220-240 V ~	630	0,42	0,56	2,9	8	450	Ø 160	186	33	488	469	455	548	550	195	250	28,6	32	9,5

Divertron 900/650*

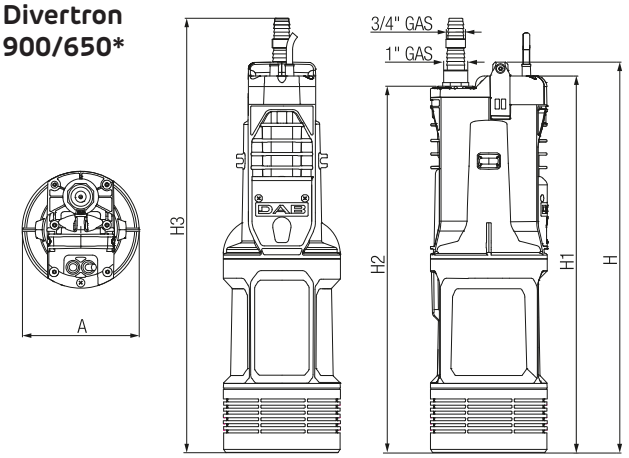

* Same dimensions for models 900 A - 650 A (with float switch)

Divertron X 900/650

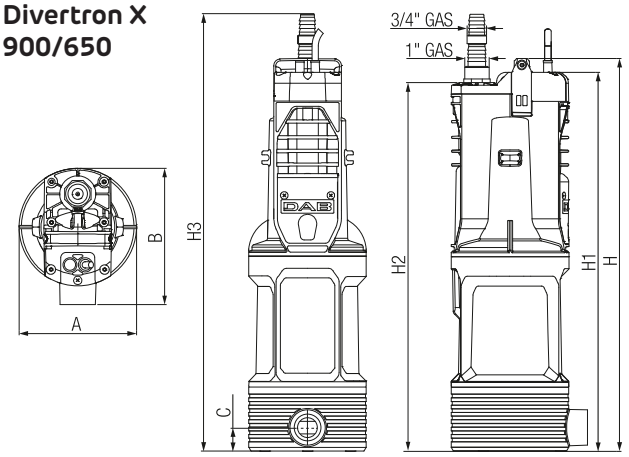

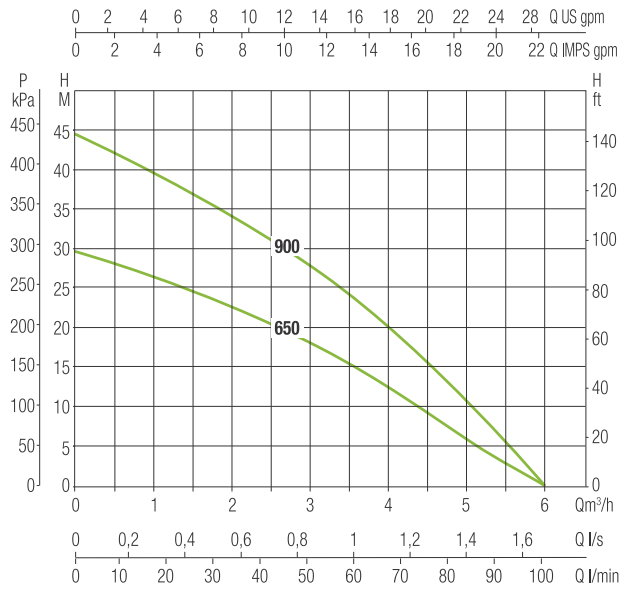

The performance curves are based on kinematic viscosity values = 1 mm²/s and density equivalent to 1000 kg/m³. Curve tolerance according to ISO 9906.

5. GRAF FILTER INSTALLATION DETAIL

5.1 Minimax-Pro Filter internal - Connection DN100

- The MINIMAX-PRO Filter is suitable for installation in a manhole or a underground tank.
- The difference in height between inlet and outlet is around 10 mm with a straight outlet and 80mm with a curved outlet.
- The filter is suitable for roof areas up to 350 m^2.
- The mesh width of the sieve insert is 0.35 mm.

5.2 Optimax-Pro Filter internal - Connection DN 100

- The Optimax-Pro Filter internal is suitable for installation in a manhole or a underground tank.
- The difference of level between inflow and outflow is 165 mm.
- The filter is suitable for roof areas up to 350 m^2.
- The mesh width of the sieve insert is 0.35 mm.

5.3 Optimax XL Filter internal - Connection DN 150

- The Optimax XL Filter internal is suitable for installation in a manhole or a underground tank.
- The difference of level between inflow and outflow is 165 mm.
- The filter is suitable for roof areas up to 750 m^2.
- The mesh width of the sieve insert is 0.35 mm.

6. ASSEMBLY OF THE MINIMAX-PRO FILTER INTERNAL

1. Clear transparent cover/filter insert
2. Housing including nozzle holder
3. Outlet bend 87°
4. Optional cleaning unit (340040)

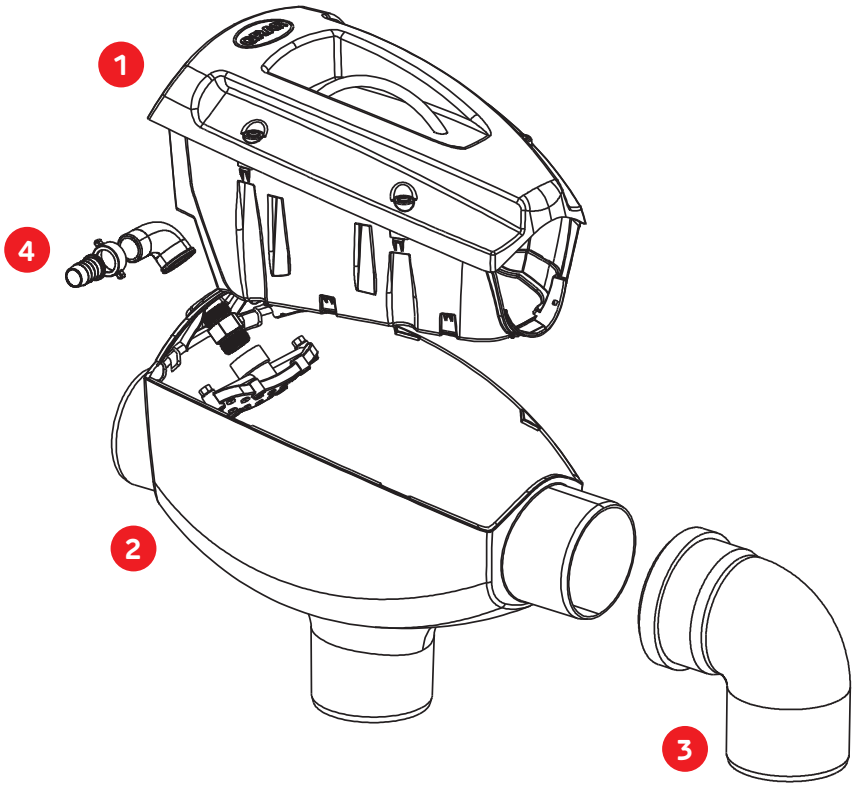

6.1 Overview Platin tank / Filter with curved outlet

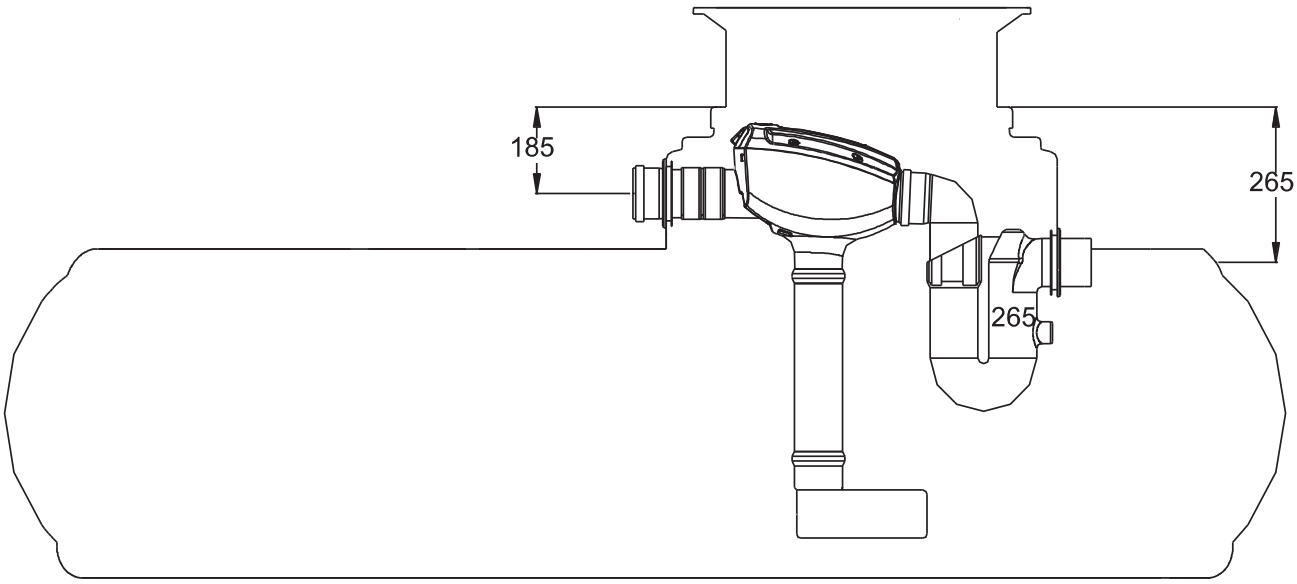

6. ASSEMBLY OF THE MINIMAX-PRO FILTER INTERNAL

6.2 Installation of inflow pipe and overflow siphon

1 Clear transparent cover/filter insert
2 Housing including nozzle holder

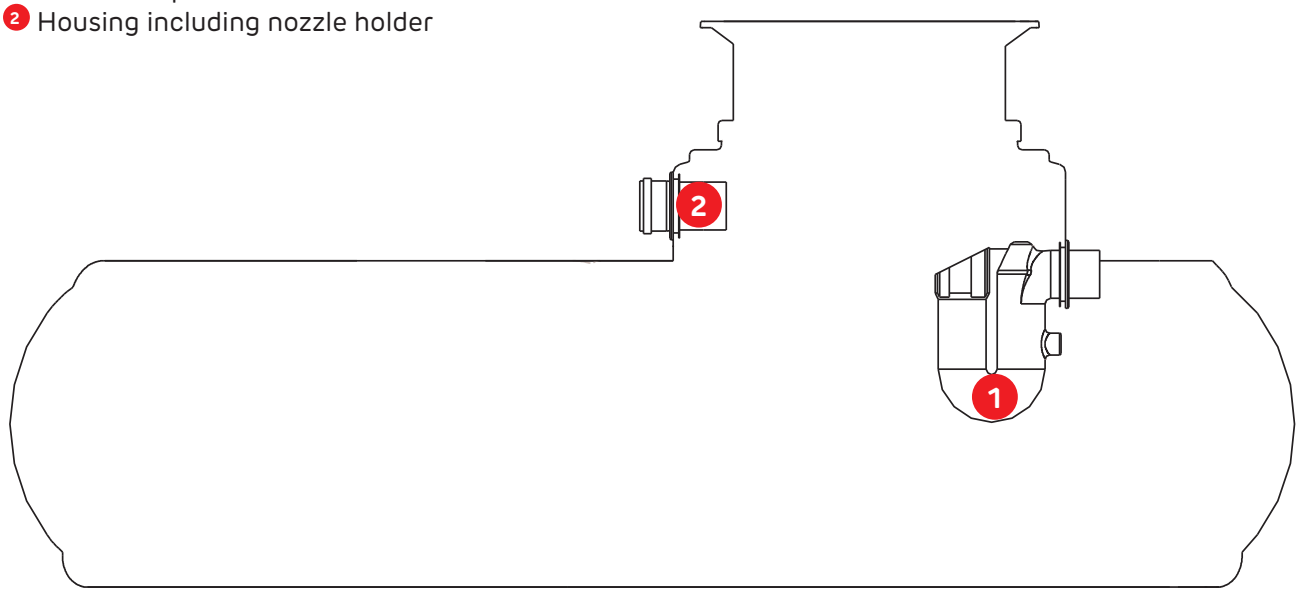

6.3 Preparation filter for installation

Connect the filter body 1 with a PVC pipe DN100 2 (on site) with the inflow calming foot 3 (contained in the filter package 342038).
Secure all connections with self tapping screws to prevent connections separating.

Platin Tank	1500 litres	3000 litres	5000 litres	7500 litres
(L)	520 mm*	550 mm*	725 mm*	1125 mm*

* (+/- 10mm)

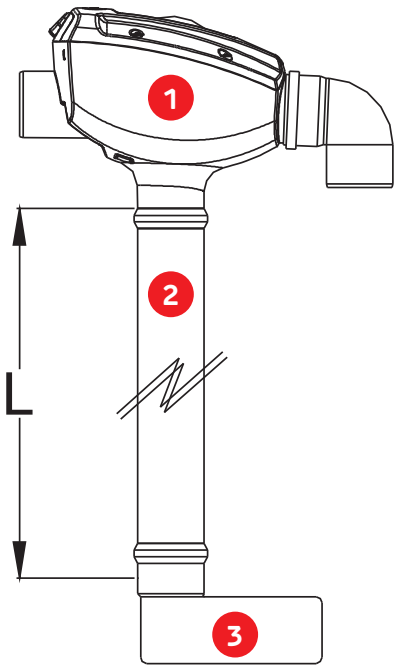

6. ASSEMBLY OF THE MINIMAX-PRO FILTER INTERNAL

6.4 Insert the filter in to the tank

Insert the filter, prepared with the inflow calming foot, in the tank.
Slide the outlet bend of the filter into the overflow siphon from above, align the supply pipe flush with the filter and then fix with the quick-connection sleeve (included in filter package 342038).

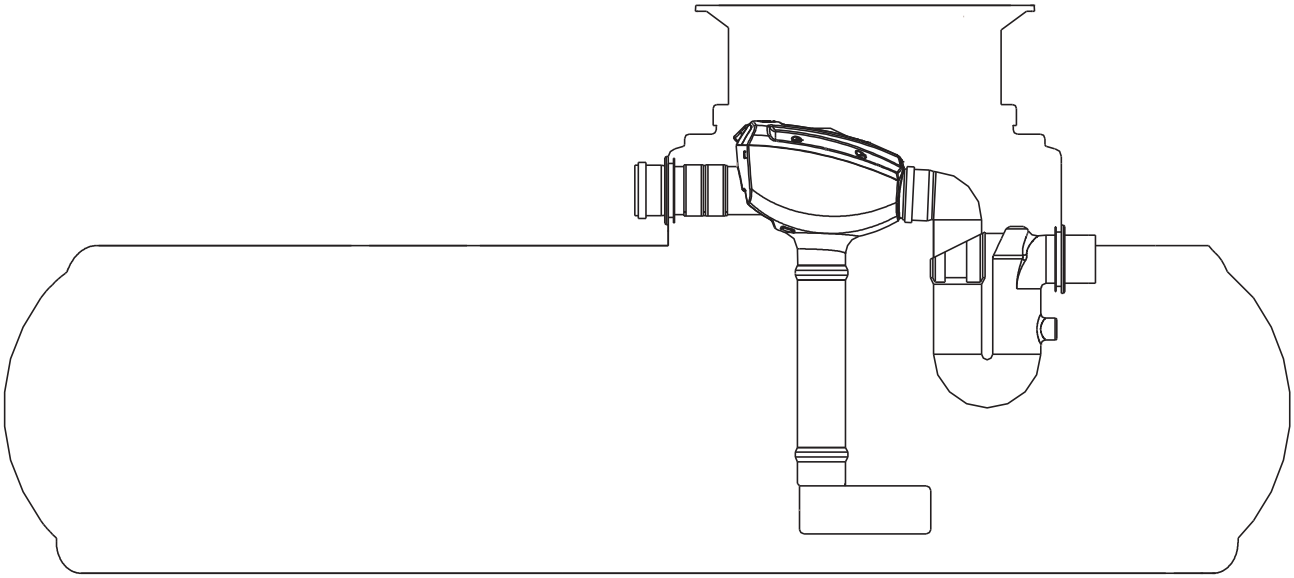

7. ASSEMBLY OF OPTIMAX PRO/XL FILTER INTERNAL

7.1 Optimax-pro filter internal (DN 100) Assembly

1. Clear transparent cover/filter insert
2. Filter body including nozzle holder
3. Support for Opticlean (340040)

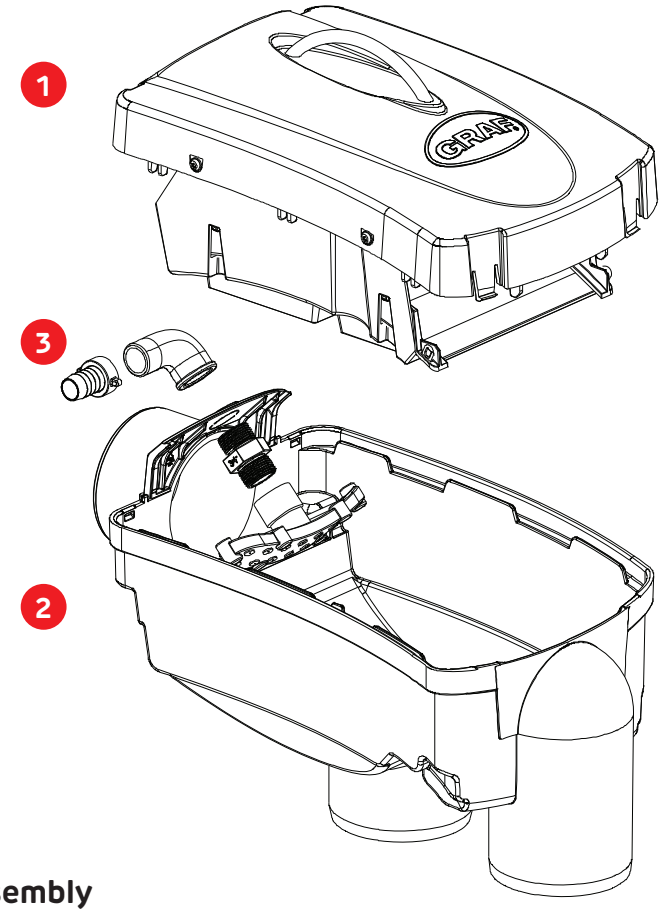

7.2 Optimax XL filter internal (DN 150) Assembly

1. Clear transparent cover/filter insert
2. Filter body including nozzle holder
3. Support for Opticlean (340040)

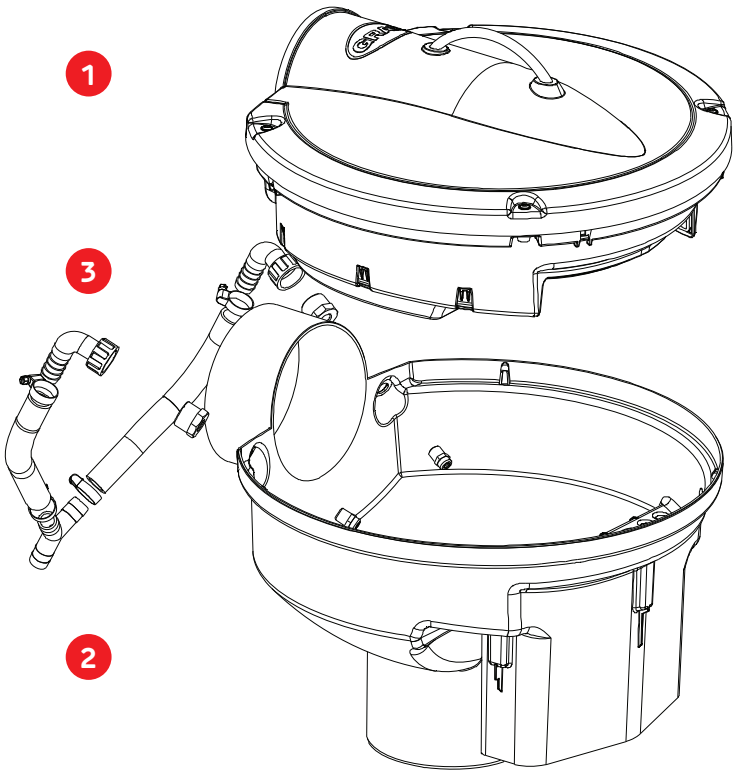

7. ASSEMBLY OF OPTIMAX PRO/XL FILTER INTERNAL

7.3 Overview

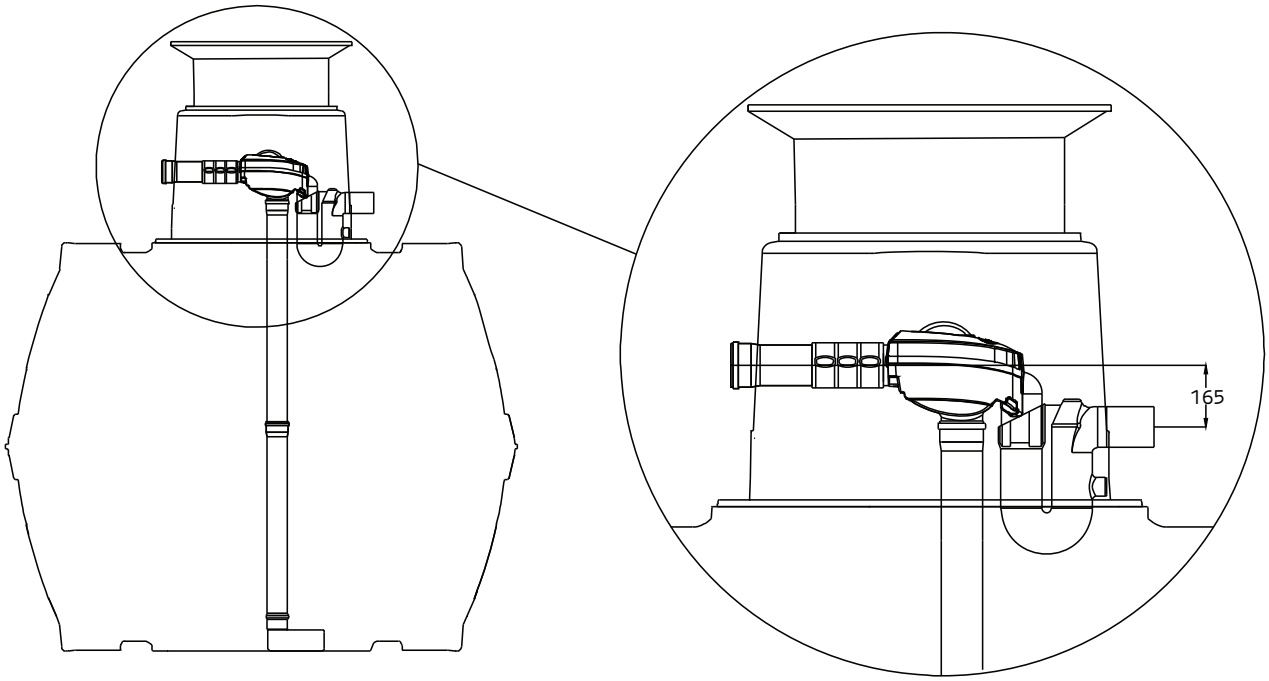

7.4 Installation of inflow pipe and overflow siphon

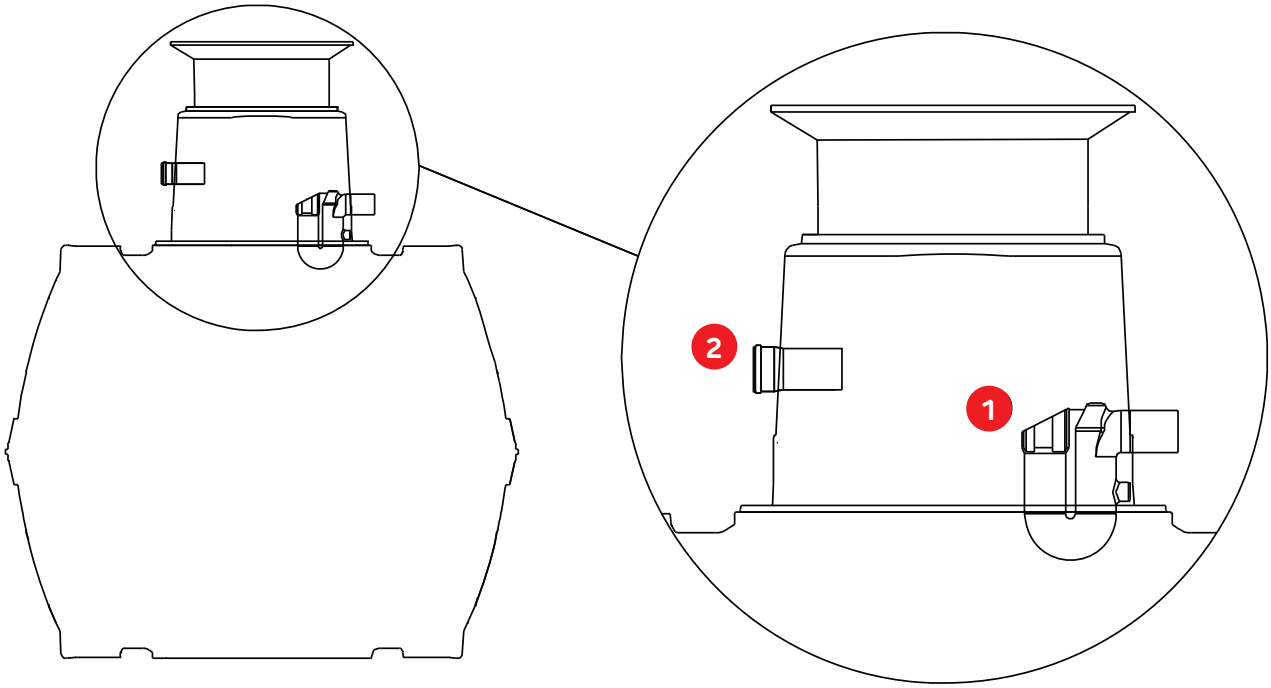

1. Insert the overflow siphon in the lower seal.
2. Insert the inflow pipe from outside.

7. ASSEMBLY OF OPTIMAX PRO/XL FILTER INTERNAL

7.5 Preparation filter for installation

Connect the filter body 1 with a PVC pipe DN 100150 2 (on site) with the inflow pot (calmed inlet) 3 (contained in filter package 3).
Fix all junctions with screws (against shift of pipes).

Carat volume (liter)	Optimax-Pro Filter internal Connection DN 100*	Optimax XL Filter internal Connection DN 150*
2.700	1370mm	1325mm
3.750	1550mm	1505mm
4.800	1780mm	1735mm
6.500	2070mm	2025mm
8.500	2053mm	2018mm
10,000	2253mm	2208mm
from 16.000	2513mm	2468mm

* (+ / - 10 mm)

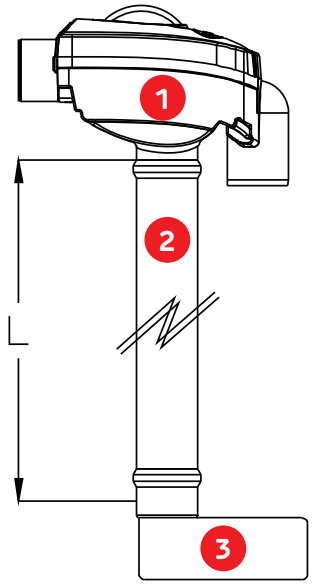

7.6 Insert the filter into the tank

Insert the filter, prepared with the inflow pot (calmed inlet), in the tank.
Telescope the overflow from top into the siphon and fix the filter inflow with the spannfix collar (contained in filter package 3.

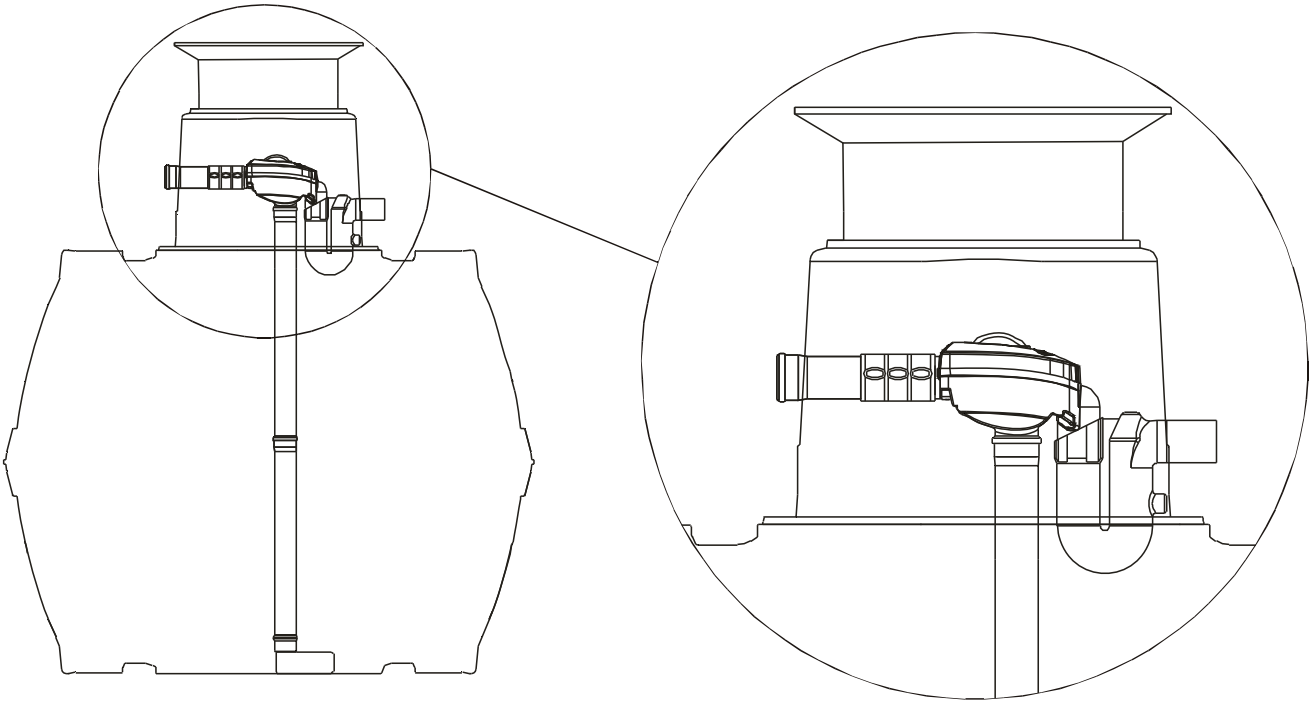

8. ACCESSORY FROM INTERNAL FILTERS

Handle Plus for Minimax and Optimax Pro Filter
Order No. 330220

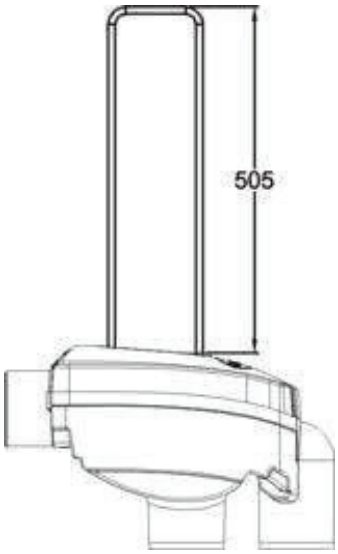

9. MAINTENANCE

Depending on the dirtiness of the roof surface water the sieve has to be cleaned several times a year. Remove the transparent cover from the filter body. The sieve and the cover is one unit. Removing and cleaning is unproblematic.

10. COMMISSIONING & SERVICE

Before commissioning and at every inspection, the lifting out mechanism must be positioned at 90° to the inlet so that no large objects such as leaves and twigs can catch on the handle. The straining filter is removed for cleaning and the basket must be thoroughly cleaned with water until all the pores are open. It is advised to clean every 4 to 5 weeks (more often in autumn due to more leaves and twigs) or according to requirements.

The filter strainer basket must be lightly pressed into place taking care that the seal sits precisely after every cleaning.

At the occasion of each inspection, the overflow siphon must be checked and flushed if necessary.

The system must be checked for leaks, cleanliness and stability at least every year.

The entire system should be serviced at intervals of approx. 5 years. In this case, all parts of the system must be cleaned and their function checked. Servicing should be carried out as follows:

- Drain the tank completely
- Clean surfaces and internal parts with water
- Remove all dirt from the tank
- Check that all internal parts are firmly connected
- Check cleanliness of the internal filter in the underground tank
- Check the operation of the submersible pump
- Check the pipe and fitting connections.

The points described in these instructions must be observed under all circumstances. All warranty rights are invalidated in the event of non-observance. Separate installation instructions are enclosed in the transportation packaging for all additional articles purchased from GRAF.

The components must be checked for any damage prior to installation under all circumstances.

Missing instructions can be downloaded on www.graf.info or can be requested from GRAF.

11. NOTES

11. NOTES

RAINWATER HARVESTING

WASTEWATER MANAGEMENT

STORMWATER MANAGEMENT

WATER BUTTS & COMPOSTERS

MULTIPURPOSE CONTAINERS

Graf UK Ltd
Regen House
Beaumont Road
Banbury
Oxfordshire OX16 1RH

T: 01608 661500
F: 01295 211333
E: info@grafuk.co.uk
www.grafuk.co.uk

Graf UK Ltd (Scotland)
220 Blairtummock Road
Queenslie Industrial
Estate
Glasgow G33 4ED

T: 0141 465 1540
F: 01295 211333
E: info@grafuk.co.uk
www.grafuk.co.uk